EPAL CP5 PALLET

760 x 1,140 mm

1,140 mm side

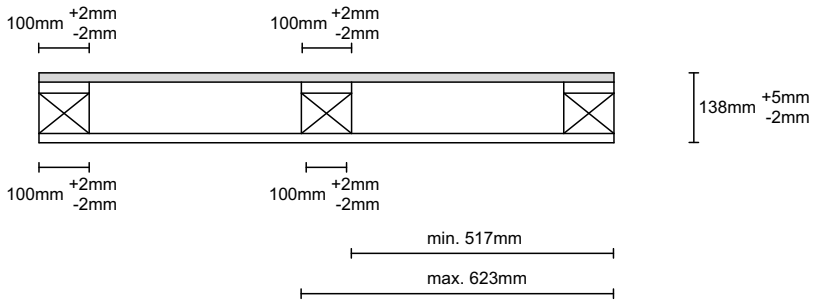

760 mm side

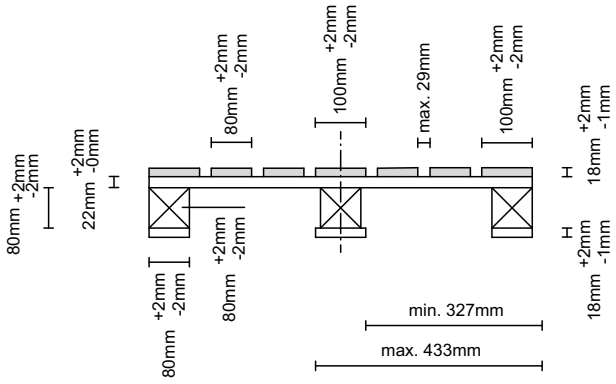
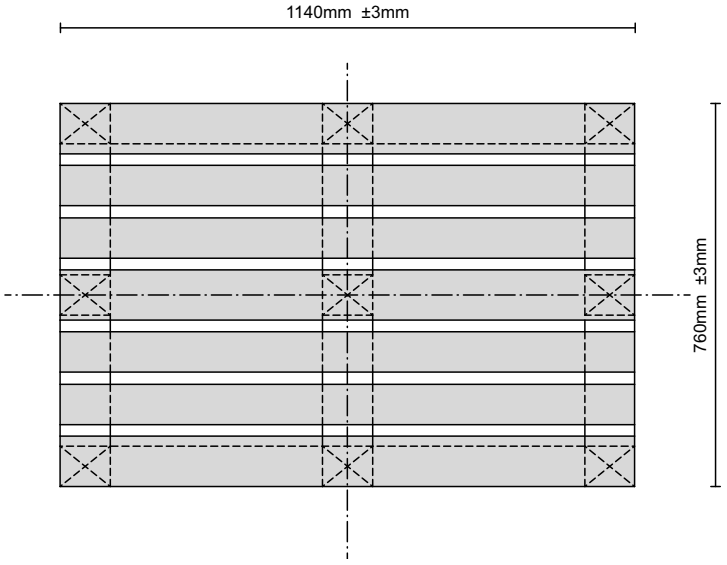
Top view