EPAL CP9 PALLET

1,140 x 1,140 mm

1,140 mm side

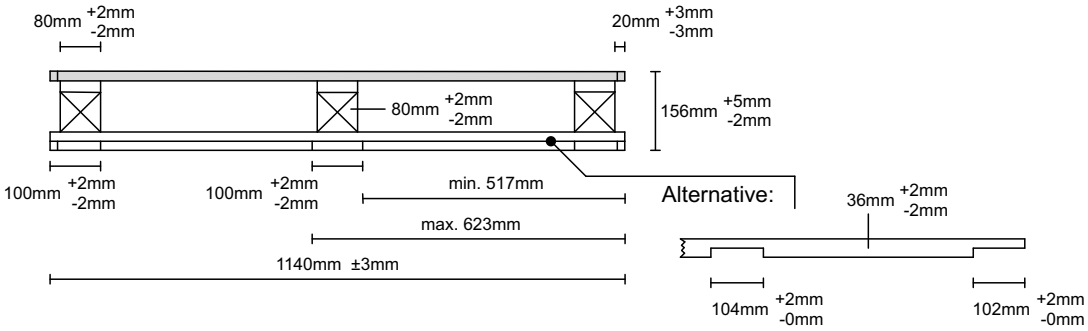

1,140 mm side

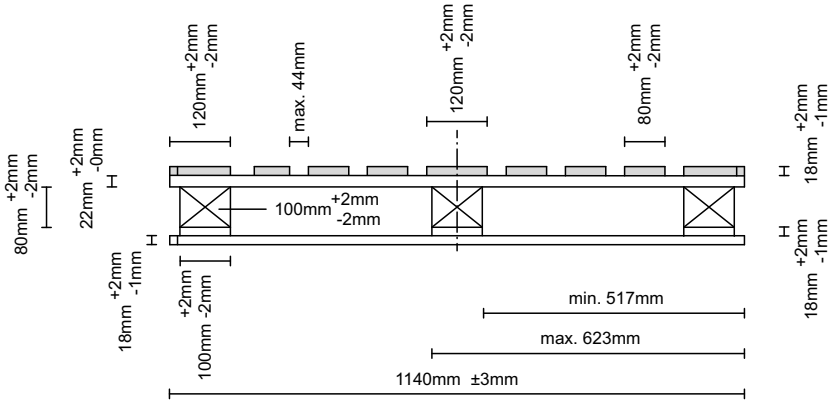
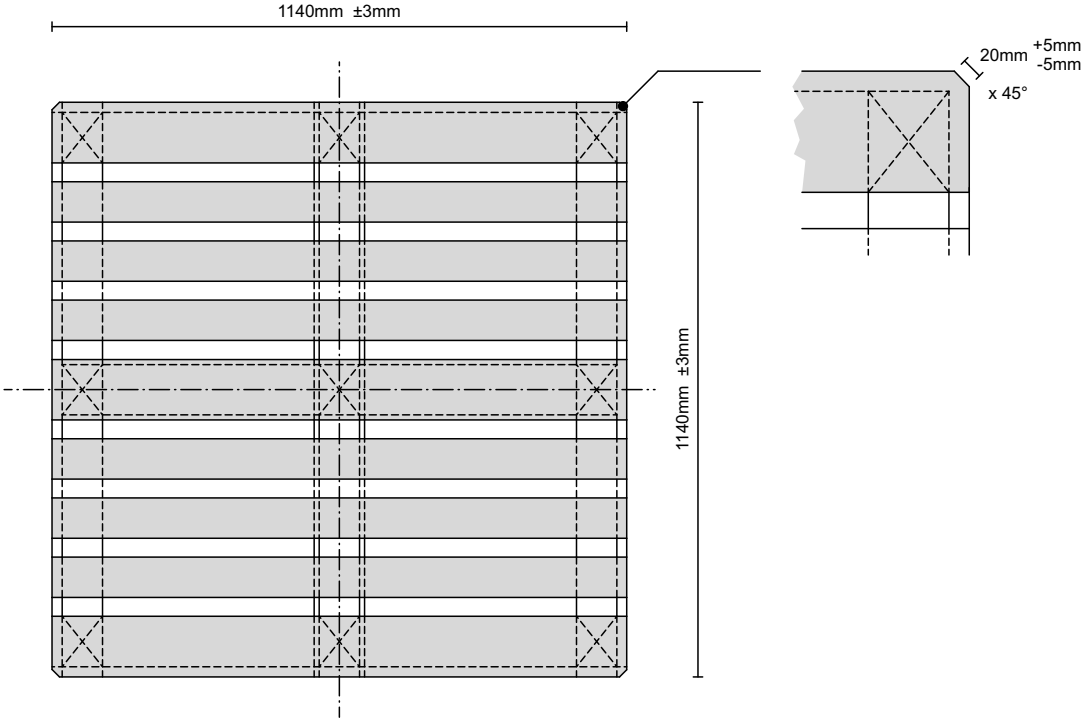
Top view